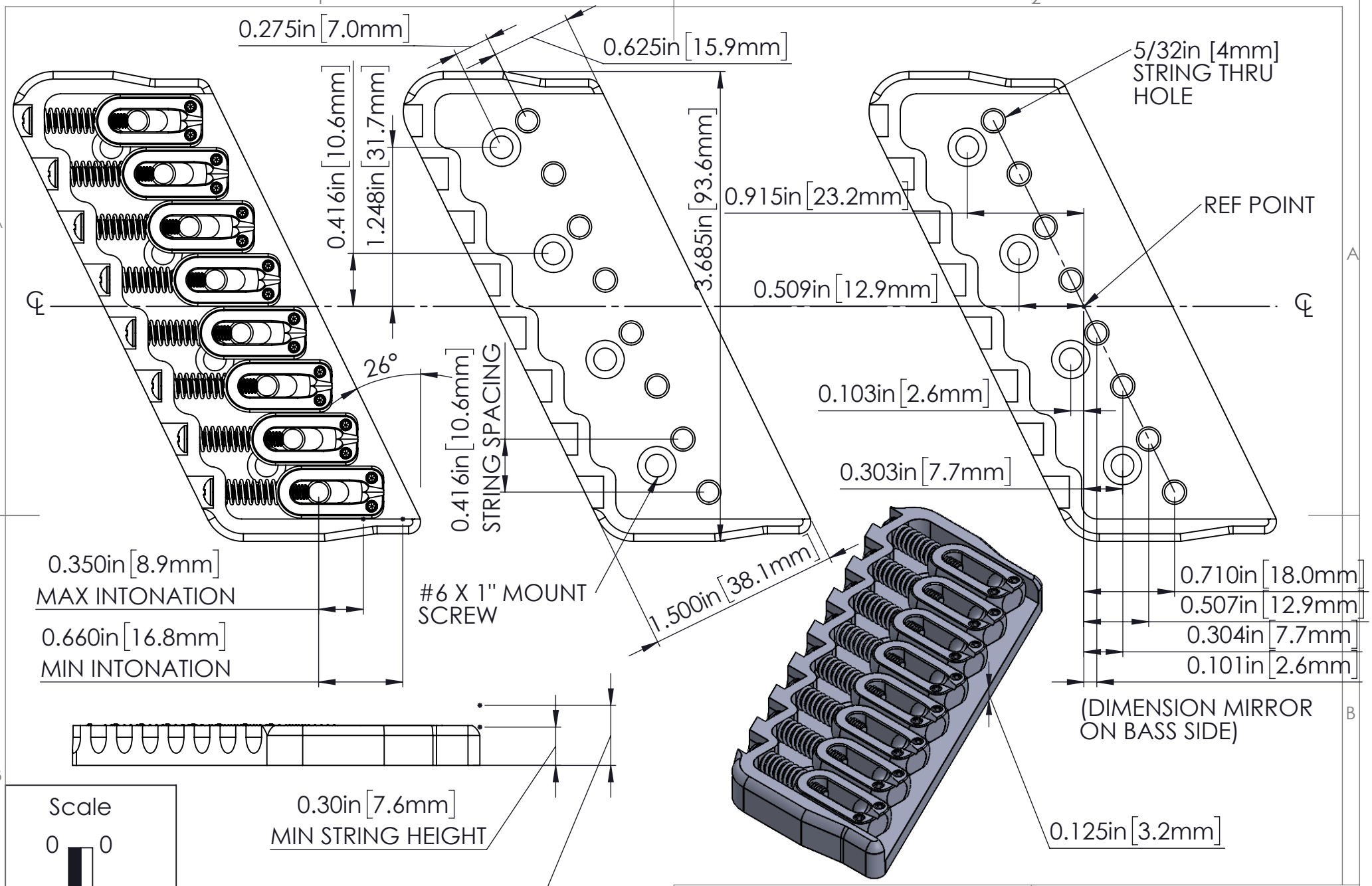

WEIGHT (WITH MOUNTING HARDWARE): 5.7oz [162g]

THIS DRAWING IS THE SOLE PROPERTY OF HIPSHOT PRODUCTS, INC. ALL RIGHTS ARE RESERVED. DIMENSIONS AND PRODUCT FEATURES MAY CHANGE WITHOUT NOTICE.

UNLESS OTHERWISE SPECIFIED: DIMENSIONS ARE IN INCHES TOLERANCE: ± .005

REV DATE: 12/1/2020

4MS08260 - 8 STG
MULTISCALE GUITAR BRIDGE
26° .125

HIPSHOT
8248 STATE ROUTE 96
Interlaken, NY 14847 U.S.A.
TEL:607-532-9404 FAX:607-532-9530
E-MAIL: info@HipshotProducts.com